PRODUCT INFORMATION PACKET

Model No: TCA1P11A3131GACD01
Catalog No: TCA1P11A3131GACD01
1.1 kW General Purpose Low Voltage IEC Motor, 3 phase, 3000 RPM, 415 V, 80M Frame, TEFC
Cast Iron IE3 Efficiency Motors

Regal and Marathon are trademarks of Regal Beloit Corporation or one of its affiliated companies.
©2020 Regal Beloit Corporation, All Rights Reserved. MC017097E

Nameplate Specifications

Output HP	**1.50 Hp**	Output KW	**1.1 kW**
Frequency	**50 Hz**	Voltage	**415 V**
Current	**2.2 A**	Speed	**2872 rpm**
Service Factor	**1**	Phase	**3**
Efficiency	**82.7 %**	Power Factor	**0.85**
Duty	**S1**	Insulation Class	**F**
Frame	**80M**	Enclosure	**Totally Enclosed Fan Cooled**
Ambient Temperature	**50 °C**	Drive End Bearing Size	**6204**
Opp Drive End Bearing Size	**6204**	UL	**No**
CSA	**No**	CE	**Yes**
IP Code	**55**		

Technical Specifications

Electrical Type	**Squirrel Cage**	Starting Method	**Direct On Line**
Poles	**2**	Rotation	**Bi-Directional**
Mounting	**B35**	Motor Orientation	**Horizontal**
Drive End Bearing	**2z-C3**	Opp Drive End Bearing	**2z-C3**
Frame Material	**Cast Iron**	Shaft Type	**Keyed**
Overall Length	**281 mm**	Frame Length	**140 mm**
Shaft Diameter	**19 mm**	Shaft Extension	**40 mm**
Assembly/Box Mounting	**Top**		
Connection Drawing	**8442000085**	Outline Drawing	**0208000180**

This is an uncontrolled document once printed or downloaded and is subject to change without notice. Date Created:07/01/2020

Uncontrolled Copy

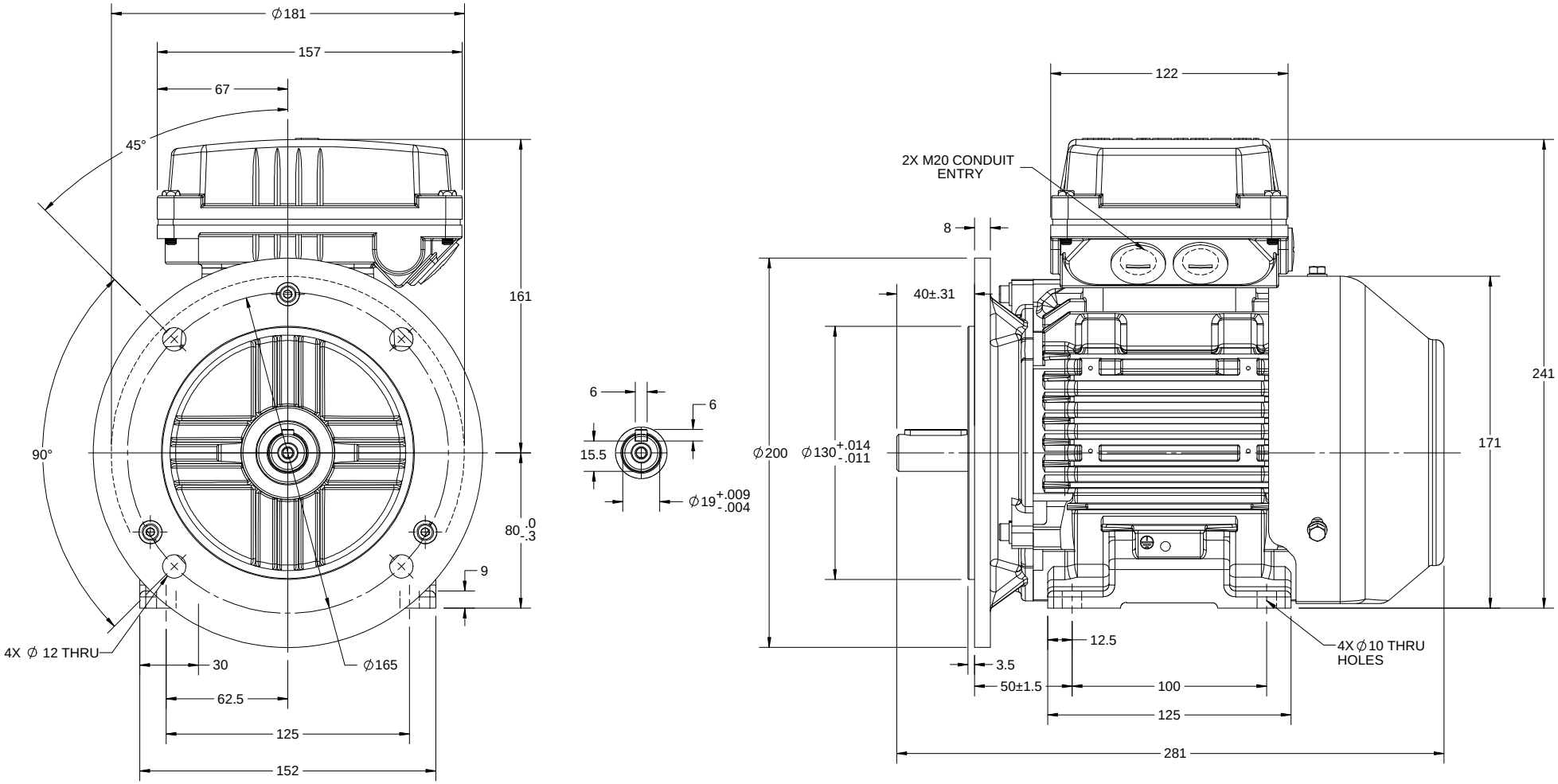

DRAWING REVISION B	REVISION BY S.MUDDA	DATE 20/06/2018	DRAWN BY SMAR	marathon Motors
ECO ECO-0147359	APPROVED BY JAY	DATE 21/06/2018	DATE 21/04/2013	
ECO DESCRIPTION OUTLINE UPDATED AS PER THE NEW 3D STRUCTURING			APPROVED BY SBD	DESCRIPTION OUTLINE 80 FR- B35 MTG. MOTOR TYPE TCA
			DATE 02/06/14	
			REFERENCE	MATERIAL / PROCESS/FINISH
			THIRD ANGLE PROJECTION	SIZE B / DRAWING NUMBER 0208000180 / SHEET 1 OF 1

COPYRIGHT REGAL BELOIT AMERICA, INC. ALL RIGHTS RESERVED.
PROPRIETARY AND CONFIDENTIAL INFORMATION - THIS DOCUMENT IS THE PROPERTY OF REGAL BELOIT AMERICA, INC. ("OWNER") AND CONTAINS OWNER'S PROPRIETARY INFORMATION. ANY PERSON, CORPORATION OR OTHER FIRM RECEIVING IT IS DEEMED, BY RECEIVING IT, TO AGREE THAT IT, AND/OR ANY PART OF IT, SHALL NOT BE DISCLOSED TO ANY PERSON, CORPORATION OR OTHER ENTITY, DUPLICATED, AND/OR USED, EXCEPT AS EXPRESSLY APPROVED IN WRITING IN ADVANCE BY OWNER. THIS DOCUMENT SHALL BE RETURNED TO OWNER UPON REQUEST. IT MAY BE SUBJECT TO CERTAIN RESTRICTIONS UNDER APPLICABLE EXPORT CONTROL LAWS AND REGULATIONS.

COPYRIGHT REGAL BELOIT AMERICA, INC. ALL RIGHTS RESERVED.
PROPRIETARY AND CONFIDENTIAL INFORMATION - THIS DOCUMENT IS THE PROPERTY OF REGAL BELOIT AMERICA, INC. ("OWNER") AND CONTAINS OWNER'S PROPRIETARY INFORMATION. ANY PERSON, CORPORATION OR OTHER FIRM RECEIVING IT IS DEEMED, BY RECEIVING IT, TO AGREE THAT IT, AND/OR ANY PART OF IT, SHALL NOT BE DISCLOSED TO ANY PERSON, CORPORATION OR OTHER ENTITY, DUPLICATED, AND/OR USED, EXCEPT AS EXPRESSLY APPROVED IN WRITING IN ADVANCE BY OWNER. THIS DOCUMENT SHALL BE RETURNED TO OWNER UPON REQUEST. IT MAY BE SUBJECT TO CERTAIN RESTRICTIONS UNDER APPLICABLE EXPORT CONTROL LAWS AND REGULATIONS.
Uncontrolled Copy

DRAWING REVISION	REVISION BY	DATE
A	SN	13/01/2017
ECO	APPROVED BY	DATE
ECO-0116390	SBD	13/01/2017
ECO DESCRIPTION		
NEW DRAWING RELEASE		

GEOMENTRIC TOLERANCE		
LINEAR DIM	>0~6	±0.1
	>6~30	±0.2
	>30~120	±0.3

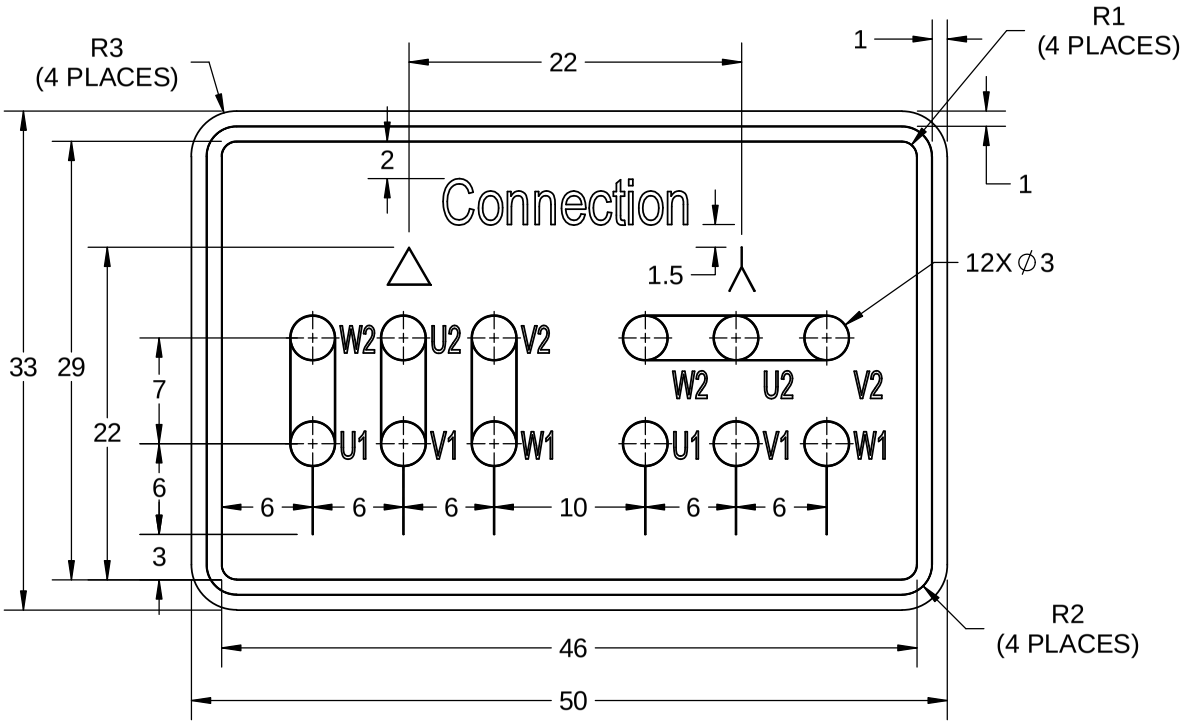

NOTES:

1. PRESSURE-SENSITIVE ADHESIVE COATED PAPER ON THE BACK OF SELF-ADHESIVE.
2. AT THE END OF YELLOW, WORDS, SYMBOLS, LETTERS ARE BLACK, BORDER IS BLACK.
3. THE TOLERANCE OF THE LINEAR SIZE OF THE TOLERANCE WITHOUT THE TOLERANCE BY THE TABLE.

8WD.442.2017

DRAWN BY: SN	REGAL™ Regal Beloit America, Inc.	
DATE: 16/12/2016		
APPROVED BY: SBD	DESCRIPTION: CONN DIAGRAM-NAMEPLATE	
DATE: 16/12/2016		
REFERENCE	MATERIAL	PROCESS/FINISH
THIRD ANGLE PROJECTION	SIZE: A / DRAWING NUMBER: 8442000085	SHEET: 1 OF 1

Uncontrolled Copy

marathon® Motors

TerraMAX®

Model No. TCA1P11A3131GACD01

U	Δ / Y	f	P	P	I	n	T	IE	% EFF at __ load				PF at __ load			I_A/I_N	T_A/T_N	T_K/T_N
(V)	Conn	[Hz]	[kW]	[hp]	[A]	[RPM]	[Nm]	Class	5/4FL	FL	3/4FL	1/2FL	FL	3/4FL	1/2FL	[pu]	[pu]	[pu]
415	Y	50	1.1	1.5	2.2	2872	3.72	IE3	-	82.7	82.7	80	0.85	0.79	0.66	6.7	3.2	3.3

Motor type	TCA	
Enclosure	TEFC	
Frame Material	Cast Iron	
Frame size	80M	
Duty	S1	
Voltage variation *	± 10%	
Frequency variation *	± 5%	
Combined variation *	10%	
Design	N	
Service factor	1.0	
Insulation class	F	
Ambient temperature	-20 to +50	°C
Temperature rise (by resistance)	70 [Class B]	K
Altitude above sea level	1000	meter
Hazardous area classification	NA	
Zone classification	NA	
Gas group	NA	
Temperature class	NA	
Rotor type	Aluminum Die cast	
Bearing type	Anti-friction ball bearing	
DE / NDE bearing	6204-2Z / 6204-2Z	
Lubrication method	Greased for life	
Type of grease	NA	

Degree of protection	IP 55	
Mounting type	IM B35	
Cooling method	IC 411	
Motor weight - approx.	21.2	kg
Gross weight - approx.	22.2	kg
Motor inertia	0.0016	kgm^2
Load inertia	Customer to Provide	
Vibration level	1.6	mm/s
Noise level (1meter distance from motor)	56	dB(A)
No. of starts hot/cold/Equally spread	2/3/4	
Starting method	DOL	
Type of coupling	Direct	
LR withstand time (hot/cold)	7/15	s
Direction of rotation	Bi-directional	
Standard rotation	Clockwise form DE	
Paint shade	RAL 5014	
Accessories		
Accessory - 1	-	
Accessory - 2	-	
Accessory - 3	-	
Terminal box position	TOP	
Maximum cable size/conduit size	1R x 3C x $10mm^2$/2 x M20 x 1.5	
Auxiliary terminal box	NA	

I_A/I_N - Locked Rotor Current / Rated Current

T_A/T_N - Locked Rotor Torque / Rated Torque

T_K/T_N - Breakdown Torque / Rated Torque

NOTE

All performance values at rated voltage and frequency.

All performance parameters are subjected to standard tolerance as per IEC 60034-1

* Voltage, Frequency and combine variation are as per IEC60034-1

Technical data are subject to change. There may be discrepancies between calculated and name plate values.

Efficiency	Europe	China	India	Aus/Nz	Brazil	Global IEC
Standards	-	-	IS 12615 : 2018	-	-	-

REGAL