PRODUCT INFORMATION PACKET

Model No: TCA0551A3131GACD01
Catalog No: TCA0551A3131GACD01
55.0 kW General Purpose Low Voltage IEC Motor, 3 phase, 3000 RPM, 415 V, 250M Frame, TEFC
Cast Iron IE3 Efficiency Motors

Regal and Marathon are trademarks of Regal Beloit Corporation or one of its affiliated companies.
©2020 Regal Beloit Corporation, All Rights Reserved. MC017097E

Nameplate Specifications

Output HP	75 Hp	Output KW	55.0 kW
Frequency	50 Hz	Voltage	415 V
Current	90.2 A	Speed	2979 rpm
Service Factor	1	Phase	3
Efficiency	94.3 %	Power Factor	0.9
Duty	S1	Insulation Class	F
Frame	250M	Enclosure	Totally Enclosed Fan Cooled
Ambient Temperature	50 °C	Drive End Bearing Size	6314
Opp Drive End Bearing Size	6314	UL	No
CSA	No	CE	Yes
IP Code	55		

Technical Specifications

Electrical Type	Squirrel Cage	Starting Method	Direct On Line
Poles	2	Rotation	Bi-Directional
Mounting	B35	Motor Orientation	Horizontal
Drive End Bearing	C3	Opp Drive End Bearing	C3
Frame Material	Cast Iron	Shaft Type	Keyed
Overall Length	938 mm	Frame Length	460 mm
Shaft Diameter	60 mm	Shaft Extension	140 mm
Assembly/Box Mounting	Top		
Outline Drawing	0225000375	Connection Drawing	8442000085

This is an uncontrolled document once printed or downloaded and is subject to change without notice. Date Created:07/01/2020

OUTLINE

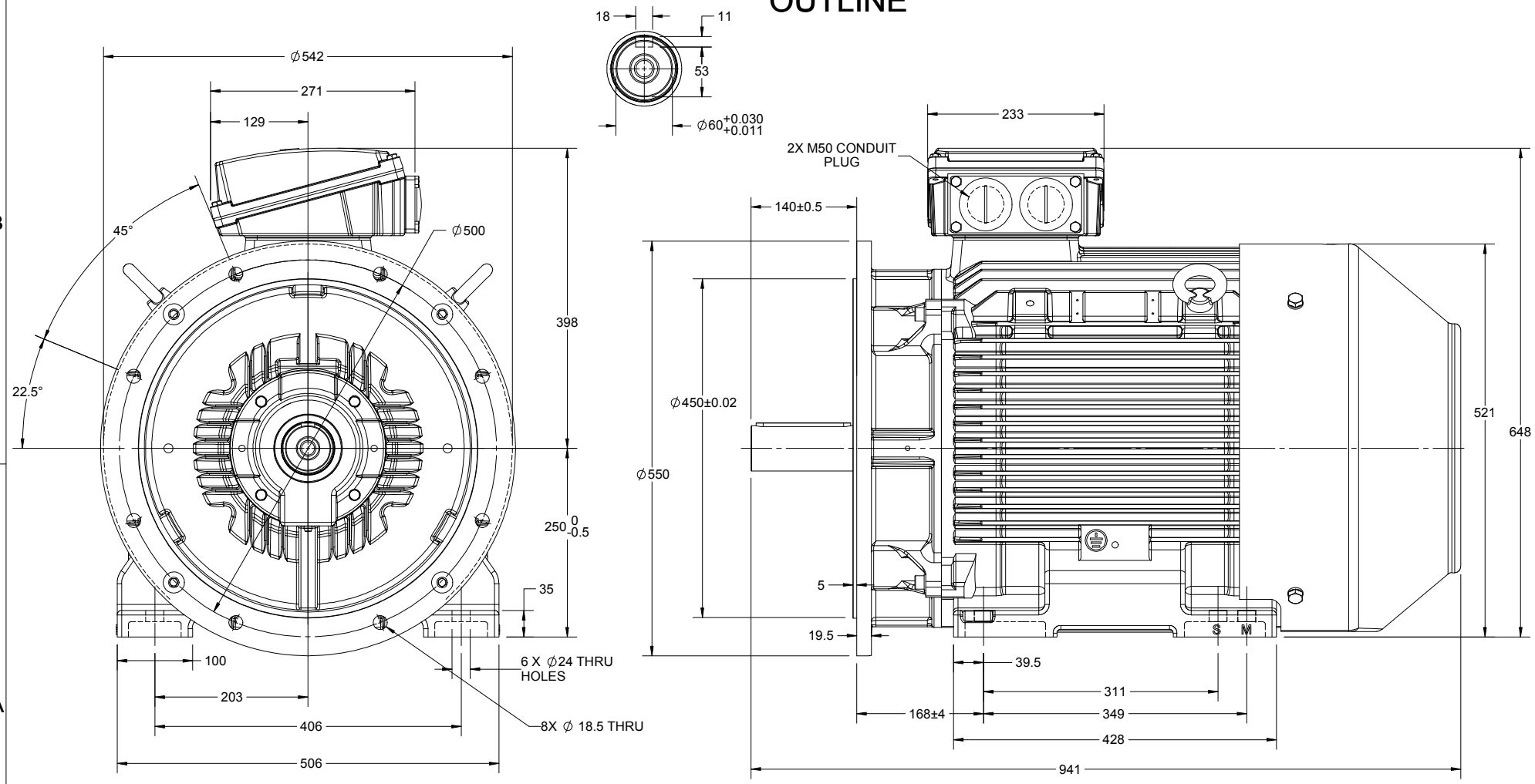

DRAWING REVISION B	REVISION BY NIV	DATE 02/05/2019	DRAWN BY JOY	marathon Motors
ECO ECO-0167240	APPROVED BY SR	DATE 02/05/2019	DATE 18/07/2014	
ECO DESCRIPTION MODEL UPDATED			APPROVED BY SBD	DESCRIPTION OUTLINE 250FR-2P-B35 MTG. MOTOR TYPE:TCA
			DATE 18/07/2014	
			REFERENCE	MATERIAL / PROCESS/FINISH
			THIRD ANGLE PROJECTION	SIZE B / DRAWING NUMBER 0225000375 / SHEET 1 OF 1

COPYRIGHT REGAL BELOIT AMERICA, INC. ALL RIGHTS RESERVED.
PROPRIETARY AND CONFIDENTIAL INFORMATION - THIS DOCUMENT IS THE PROPERTY OF REGAL BELOIT AMERICA, INC. ("OWNER") AND CONTAINS OWNER'S PROPRIETARY INFORMATION. ANY PERSON, CORPORATION OR OTHER FIRM RECEIVING IT IS DEEMED, BY RECEIVING IT, TO AGREE THAT IT, AND/OR ANY PART OF IT, SHALL NOT BE DISCLOSED TO ANY PERSON, CORPORATION OR OTHER ENTITY, DUPLICATED, AND/OR USED, EXCEPT AS EXPRESSLY APPROVED IN WRITING IN ADVANCE BY OWNER. THIS DOCUMENT SHALL BE RETURNED TO OWNER UPON REQUEST. IT MAY BE SUBJECT TO CERTAIN RESTRICTIONS UNDER APPLICABLE EXPORT CONTROL LAWS AND REGULATIONS.

COPYRIGHT REGAL BELOIT AMERICA, INC. ALL RIGHTS RESERVED.
PROPRIETARY AND CONFIDENTIAL INFORMATION - THIS DOCUMENT IS THE PROPERTY OF REGAL BELOIT AMERICA, INC. ("OWNER") AND CONTAINS OWNER'S PROPRIETARY INFORMATION. ANY PERSON, CORPORATION OR OTHER FIRM RECEIVING IT IS DEEMED, BY RECEIVING IT, TO AGREE THAT IT, AND/OR ANY PART OF IT, SHALL NOT BE DISCLOSED TO ANY PERSON, CORPORATION OR OTHER ENTITY, DUPLICATED, AND/OR USED, EXCEPT AS EXPRESSLY APPROVED IN WRITING IN ADVANCE BY OWNER. THIS DOCUMENT SHALL BE RETURNED TO OWNER UPON REQUEST. IT MAY BE SUBJECT TO CERTAIN RESTRICTIONS UNDER APPLICABLE EXPORT CONTROL LAWS AND REGULATIONS.
Uncontrolled Copy

DRAWING REVISION	REVISION BY	DATE
A	SN	13/01/2017
ECO	APPROVED BY	DATE
ECO-0116390	SBD	13/01/2017

ECO DESCRIPTION: NEW DRAWING RELEASE

GEOMENTRIC TOLERANCE		
LINEAR DIM	>0~6	±0.1
	>6~30	±0.2
	>30~120	±0.3

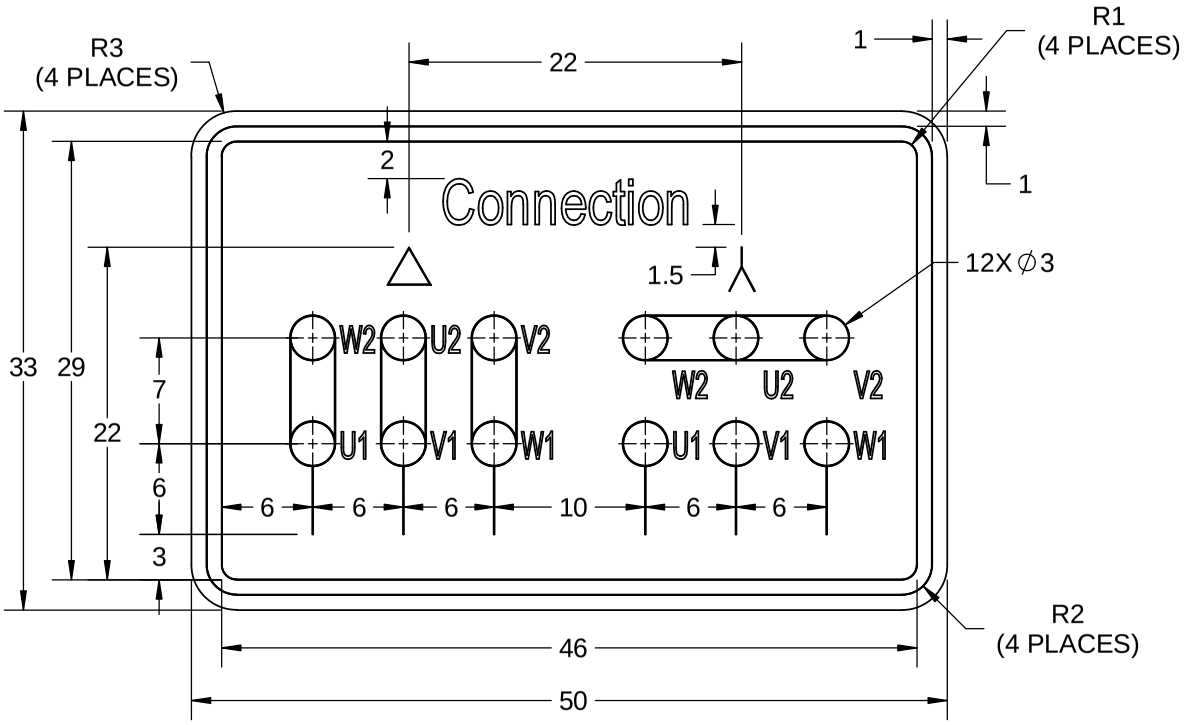

NOTES:

1. PRESSURE-SENSITIVE ADHESIVE COATED PAPER ON THE BACK OF SELF-ADHESIVE.
2. AT THE END OF YELLOW, WORDS, SYMBOLS, LETTERS ARE BLACK, BORDER IS BLACK.
3. THE TOLERANCE OF THE LINEAR SIZE OF THE TOLERANCE WITHOUT THE TOLERANCE BY THE TABLE.

8WD.442.2017

DRAWN BY: SN	REGAL™ Regal Beloit America, Inc.	
DATE: 16/12/2016		
APPROVED BY: SBD	DESCRIPTION: CONN DIAGRAM-NAMEPLATE	
DATE: 16/12/2016		
REFERENCE	MATERIAL	PROCESS/FINISH
THIRD ANGLE PROJECTION	SIZE: A / DRAWING NUMBER: 8442000085	SHEET: 1 OF 1

Uncontrolled Copy

marathon® Motors

TerraMAX®

Model No. TCA0551A3131GACD01

U (V)	Δ / Y Conn	f [Hz]	P [kW]	P [hp]	I [A]	n [RPM]	T [Nm]	IE Class	% EFF at __ load 5/4FL	FL	3/4FL	1/2FL	PF at __ load FL	3/4FL	1/2FL	I_A/I_N [pu]	T_A/T_N [pu]	T_K/T_N [pu]
415	Δ	50	55	75	90.2	2979	179.27	IE3	-	94.3	94.3	93.2	0.9	0.87	0.8	7.6	2.1	3.6

Motor type	TCA	
Enclosure	TEFC	
Frame Material	Cast Iron	
Frame size	250M	
Duty	S1	
Voltage variation *	± 10%	
Frequency variation *	± 5%	
Combined variation *	10%	
Design	N	
Service factor	1.0	
Insulation class	F	
Ambient temperature	-20 to +50	°C
Temperature rise (by resistance)	70 [Class B]	K
Altitude above sea level	1000	meter
Hazardous area classification	NA	
Zone classification	NA	
Gas group	NA	
Temperature class	NA	
Rotor type	Aluminum Die cast	
Bearing type	Anti-friction ball bearing	
DE / NDE bearing	6314 C3 / 6314 C3	
Lubrication method	Regreasable	
Type of grease	Shell Gadus S5 V100 or Equivalent	

Degree of protection	IP 55	
Mounting type	IM B35	
Cooling method	IC 411	
Motor weight - approx.	560	kg
Gross weight - approx.	595	kg
Motor inertia	0.7574	kgm^2
Load inertia	Customer to Provide	
Vibration level	2.2	mm/s
Noise level (1meter distance from motor)	75	dB(A)
No. of starts hot/cold/Equally spread	2/3/4	
Starting method	DOL	
Type of coupling	Direct	
LR withstand time (hot/cold)	15/30	s
Direction of rotation	Bi-directional	
Standard rotation	Clockwise form DE	
Paint shade	RAL 5014	
Accessories		
Accessory - 1	-	
Accessory - 2	-	
Accessory - 3	-	
Terminal box position	TOP	
Maximum cable size/conduit size	1R x 3C x 95mm²/2 x M50 x 1.5	
Auxiliary terminal box	NA	

I_A/I_N - Locked Rotor Current / Rated Current
T_A/T_N - Locked Rotor Torque / Rated Torque
T_K/T_N - Breakdown Torque / Rated Torque

NOTE

All performance values at rated voltage and frequency.
All performance parameters are subjected to standard tolerance as per IEC 60034-1
* Voltage, Frequency and combine variation are as per IEC60034-1
Technical data are subject to change. There may be discrepancies between calculated and name plate values.

Efficiency	Europe	China	India	Aus/Nz	Brazil	Global IEC
Standards	-	-	IS 12615 : 2018	-	-	-

REGAL

Uncontrolled Copy

marathon® Motors

TerraMAX®

Model No. TCA0551A3131GACD01

Enclosure	U (V)	Δ / Y Conn	f [Hz]	P [kW]	P [hp]	I [A]	n [RPM]	T [kgm]	T [Nm]	IE Class	Amb [°C]	Duty	Elevation [m]	Inertia [kg-m^2]	Weight [kg]
TEFC	415	Δ	50	55	75	90.2	2979	18.28	179.27	IE3	50	S1	1000	0.7574	560

Motor Load Data

Load Point		NL	1/4FL	1/2FL	3/4FL	FL	5/4FL
Current	A	27.6	35.4	51.3	70.3	90.2	
Torque	Nm	0.0	44.6	89.3	134.2	179.3	
Speed	r/min	3000	2995	2990	2985	2979	
Efficiency	%	0.0	89.4	93.2	94.3	94.3	
Power Factor	%	7.8	61.4	80.0	87.0	90.0	

Performance vs Load Chart

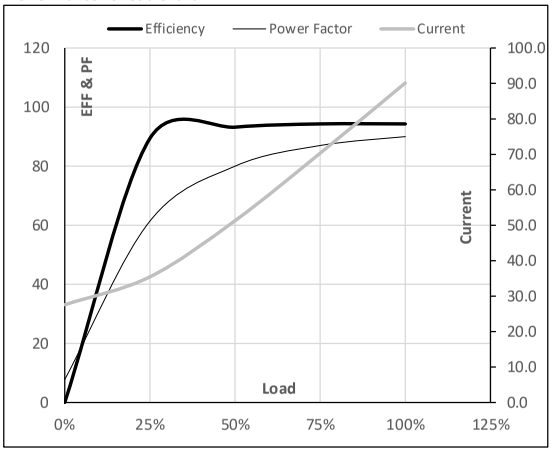

Motor Speed Torque Data

Load Point		LR	P-Up	BD	Rated	NL
Speed	r/min	0	600	2741	2979	3000
Current	A	685.2	616.7	417.7	90.2	27.6
Torque	pu	2.1	1.8	3.6	1	0

Starting Characteristics Chart

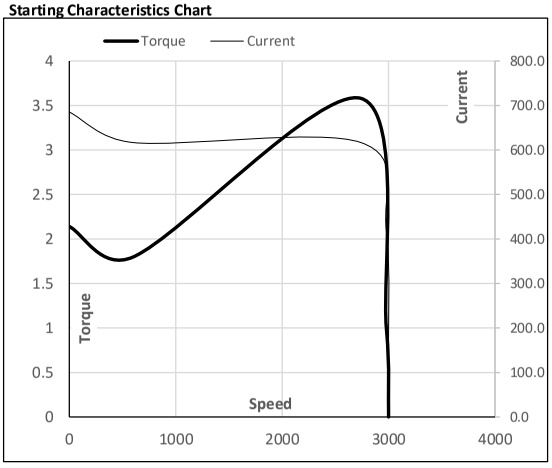

NOTE Refer data sheet for applicable standard and tolerances on performance parameters

Issued By
Issued Date

REGAL

Uncontrolled Copy

marathon® Motors

TerraMAX®

Model No. TCA0551A3131GACD01

Enclosure	U (V)	Δ / Y Conn	f [Hz]	P [kW]	P [hp]	I [A]	n [rpm]	T [kgm]	T [Nm]	IE Class	Amb [°C]	Duty	Elevation [m]	Inertia [kg-m^2]	Weight [kg]
TEFC	415	Δ	50	55	75	90.2	2979	18.27	179.27	IE3	50	S1	1000	0.7574	560

Motor Speed Torque Data

Load		FL	I_1	I_2	I_3	I_4	I_5	LR
TWT Hot	s	10000	57	38	30	25	20	15
TWT Cold	s	10000	110	76	60	45	40	30
Current	pu	1	2	3	4	5	5.5	7.6

Thermal Characteristics Chart

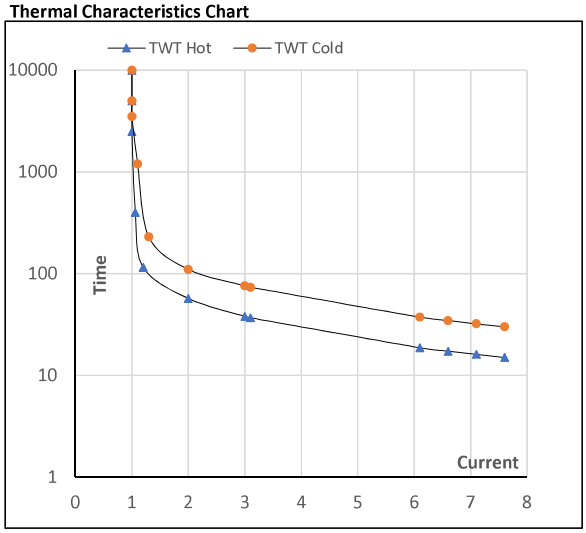

NOTE Refer data sheet for applicable standard and tolerances on performance parameters

Issued By
Issued Date

REGAL