# PRODUCT INFORMATION PACKET

Model No: TCA0151A3131GACD01
Catalog No: TCA0151A3131GACD01
15.0 kW General Purpose Low Voltage IEC  Motor, 3 phase, 3000 RPM, 415 V, 160M Frame, TEFC
Cast Iron IE3 Efficiency Motors

Regal and Marathon are trademarks of Regal Beloit Corporation or one of its affiliated companies.
©2020 Regal Beloit Corporation, All Rights Reserved. MC017097E

## Nameplate Specifications

| | | | |
|---|---|---|---|
| Output HP | 20 Hp | Output KW | 15.0 kW |
| Frequency | 50 Hz | Voltage | 415 V |
| Current | 25.0 A | Speed | 2950 rpm |
| Service Factor | 1 | Phase | 3 |
| Efficiency | 91.9 % | Power Factor | 0.91 |
| Duty | S1 | Insulation Class | F |
| Frame | 160M | Enclosure | Totally Enclosed Fan Cooled |
| Ambient Temperature | 50 °C | Drive End Bearing Size | 6309 |
| Opp Drive End Bearing Size | 6209 | UL | No |
| CSA | No | CE | Yes |
| IP Code | 55 | | |

## Technical Specifications

| | | | |
|---|---|---|---|
| Electrical Type | Squirrel Cage | Starting Method | Direct On Line |
| Poles | 2 | Rotation | Bi-Directional |
| Mounting | B35 | Motor Orientation | Horizontal |
| Drive End Bearing | 2z-C3 | Opp Drive End Bearing | 2z-C3 |
| Frame Material | Cast Iron | Shaft Type | Keyed |
| Overall Length | 622 mm | Frame Length | 254 mm |
| Shaft Diameter | 42 mm | Shaft Extension | 110 mm |
| Assembly/Box Mounting | Top | | |
| Outline Drawing | 0216000480 | Connection Drawing | 8442000085 |

This is an uncontrolled document once printed or downloaded and is subject to change without notice. Date Created:06/01/2020

Uncontrolled Copy

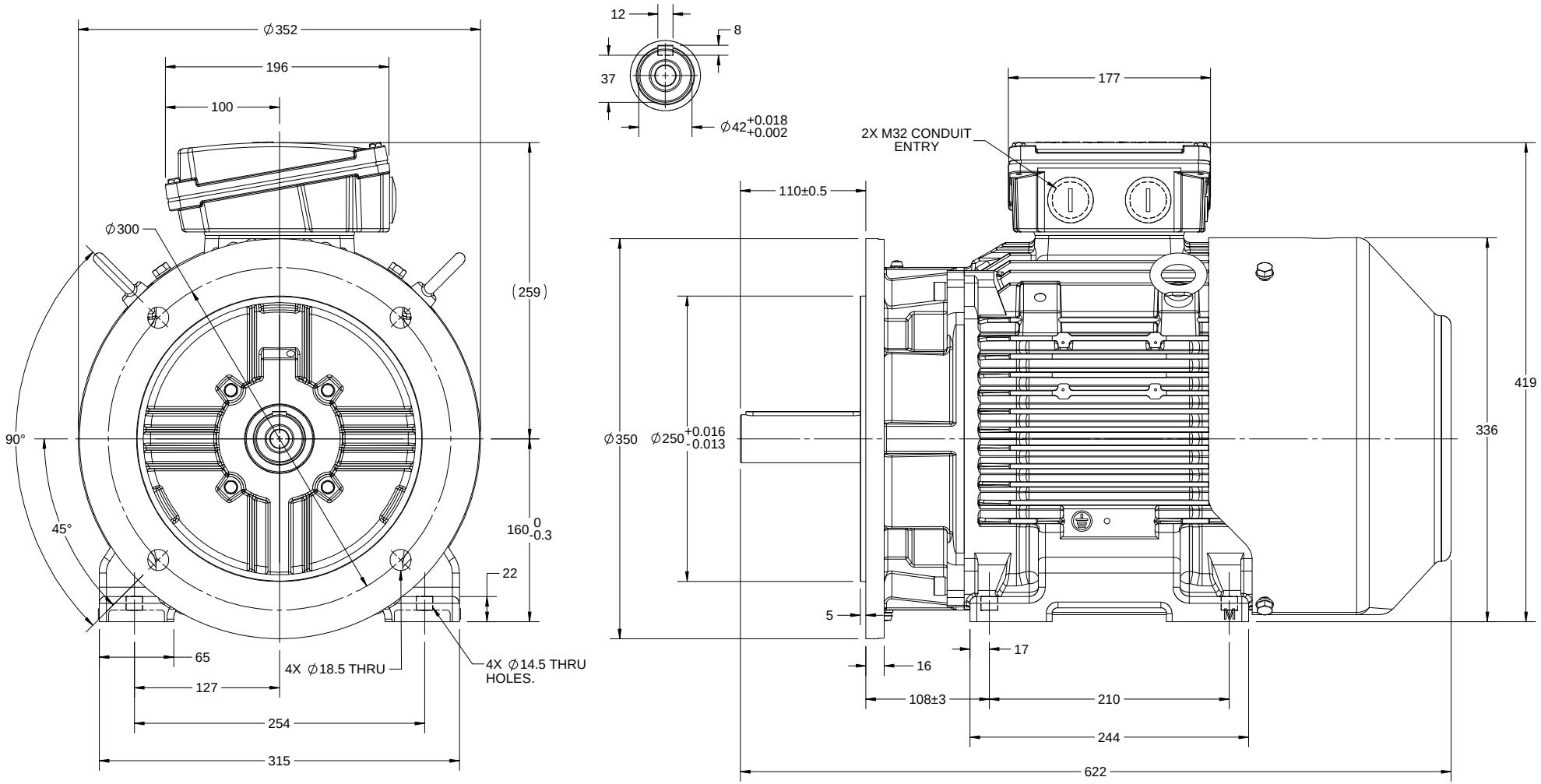


| DRAWING REVISION | REVISION BY | DATE |
|---|---|---|
| B | I. RAMDAS | 06/07/2018 |
| ECO: ECO-0147359 | APPROVED BY: JAY | DATE: 06/07/2018 |

ECO DESCRIPTION: OUTLINE UPDATED AS PER NEW 3D STRUCTURING

COPYRIGHT REGAL BELOIT AMERICA, INC. ALL RIGHTS RESERVED.
PROPRIETARY AND CONFIDENTIAL INFORMATION - THIS DOCUMENT IS THE PROPERTY OF REGAL BELOIT AMERICA, INC. ("OWNER") AND CONTAINS OWNER'S PROPRIETARY INFORMATION. ANY PERSON, CORPORATION OR OTHER FIRM RECEIVING IT IS DEEMED, BY RECEIVING IT, TO AGREE THAT IT, AND/OR ANY PART OF IT, SHALL NOT BE DISCLOSED TO ANY PERSON, CORPORATION OR OTHER ENTITY, DUPLICATED, AND/OR USED, EXCEPT AS EXPRESSLY APPROVED IN WRITING IN ADVANCE BY OWNER. THIS DOCUMENT SHALL BE RETURNED TO OWNER UPON REQUEST. IT MAY BE SUBJECT TO CERTAIN RESTRICTIONS UNDER APPLICABLE EXPORT CONTROL LAWS AND REGULATIONS.

| | |
|---|---|
| DRAWN BY | KCS |
| DATE | 10/11/2014 |
| APPROVED BY | SBD |
| DATE | 10/11/2014 |
| REFERENCE | |
| THIRD ANGLE PROJECTION | |

Regal Beloit America, Inc.

DESCRIPTION: OUTLINE
160M FR B35 MTG. MOTOR TYPE TCA

MATERIAL | PROCESS/FINISH

SIZE: B | DRAWING NUMBER: 0216000480 | SHEET: 1 OF 1

COPYRIGHT REGAL BELOIT AMERICA, INC. ALL RIGHTS RESERVED.
PROPRIETARY AND CONFIDENTIAL INFORMATION - THIS DOCUMENT IS THE PROPERTY OF REGAL BELOIT AMERICA, INC. ("OWNER") AND CONTAINS OWNER'S PROPRIETARY INFORMATION. ANY PERSON, CORPORATION OR OTHER FIRM RECEIVING IT IS DEEMED, BY RECEIVING IT, TO AGREE THAT IT, AND/OR ANY PART OF IT, SHALL NOT BE DISCLOSED TO ANY PERSON, CORPORATION OR OTHER ENTITY, DUPLICATED, AND/OR USED, EXCEPT AS EXPRESSLY APPROVED IN WRITING IN ADVANCE BY OWNER. THIS DOCUMENT SHALL BE RETURNED TO OWNER UPON REQUEST. IT MAY BE SUBJECT TO CERTAIN RESTRICTIONS UNDER APPLICABLE EXPORT CONTROL LAWS AND REGULATIONS.
Uncontrolled Copy

| DRAWING REVISION | REVISION BY | DATE |
|---|---|---|
| A | SN | 13/01/2017 |
| ECO | APPROVED BY | DATE |
| ECO-0116390 | SBD | 13/01/2017 |

ECO DESCRIPTION: NEW DRAWING RELEASE

| GEOMENTRIC TOLERANCE | | |
|---|---|---|
| LINEAR DIM | >0~6 | ±0.1 |
| | >6~30 | ±0.2 |
| | >30~120 | ±0.3 |

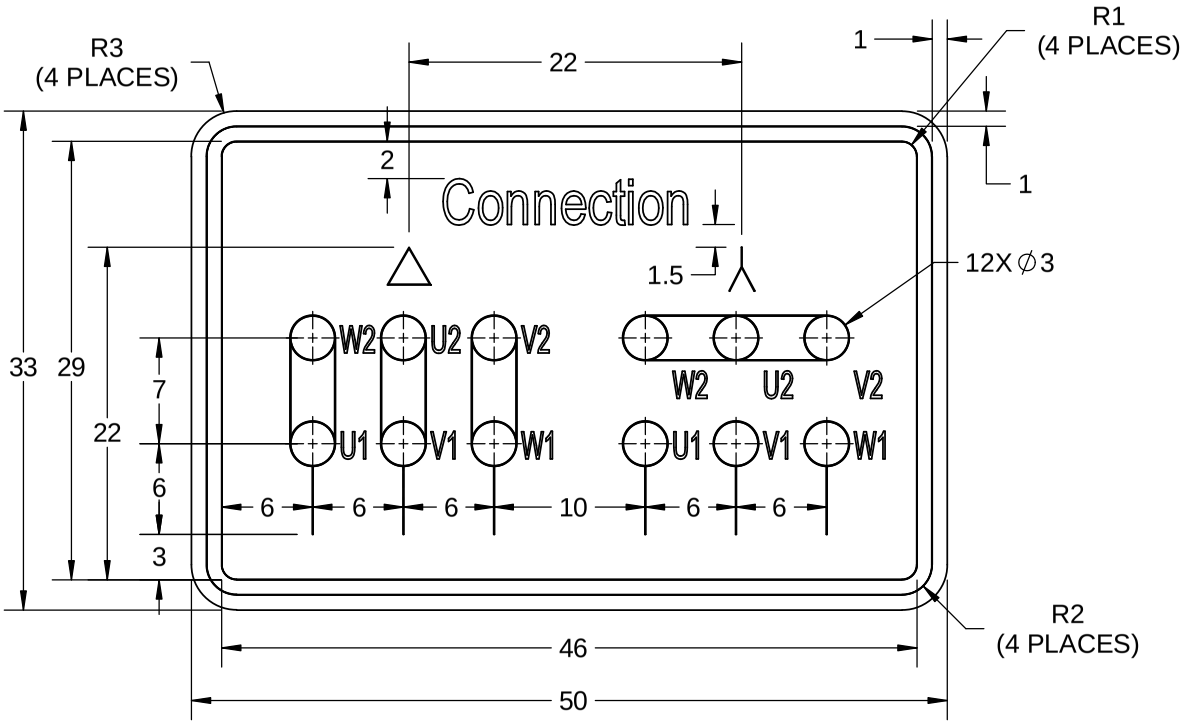


NOTES:

1. PRESSURE-SENSITIVE ADHESIVE COATED PAPER ON THE BACK OF SELF-ADHESIVE.
2. AT THE END OF YELLOW, WORDS, SYMBOLS, LETTERS ARE BLACK, BORDER IS BLACK.
3. THE TOLERANCE OF THE LINEAR SIZE OF THE TOLERANCE WITHOUT THE TOLERANCE BY THE TABLE.

8WD.442.2017

| | | |
|---|---|---|
| DRAWN BY: SN | REGAL™ Regal Beloit America, Inc. | |
| DATE: 16/12/2016 | | |
| APPROVED BY: SBD | DESCRIPTION: CONN DIAGRAM-NAMEPLATE | |
| DATE: 16/12/2016 | | |
| REFERENCE | MATERIAL | PROCESS/FINISH |
| THIRD ANGLE PROJECTION | SIZE: A / DRAWING NUMBER: 8442000085 | SHEET: 1 OF 1 |

Uncontrolled Copy

marathon® Motors

TerraMAX®

**Model No.** TCA0151A3131GACD01

| Enclosure | U (V) | Δ / Y Conn | f [Hz] | P [kW] | P [hp] | I [A] | n [RPM] | T [kgm] | T [Nm] | IE Class | Amb [°C] | Duty | Elevation [m] | Inertia [kg-m$^2$] | Weight [kg] |
|---|---|---|---|---|---|---|---|---|---|---|---|---|---|---|---|
| TEFC | 415 | Δ | 50 | 15 | 20 | 25.0 | 2950 | 4.92 | 48.28 | IE3 | 50 | S1 | 1000 | 0.0796 | 159 |

**Motor Load Data**

| Load Point | | NL | 1/4FL | 1/2FL | 3/4FL | FL | 5/4FL |
|---|---|---|---|---|---|---|---|
| Current | A | 7.3 | 9.5 | 13.8 | 19.0 | 25.0 | |
| Torque | Nm | 0.0 | 11.9 | 23.9 | 36.0 | 48.3 | |
| Speed | r/min | 3000 | 2988 | 2976 | 2964 | 2950 | |
| Efficiency | % | 0.0 | 87.3 | 91.2 | 91.9 | 91.9 | |
| Power Factor | % | 9.3 | 62.9 | 81.0 | 88.0 | 91.0 | |

**Performance vs Load Chart**

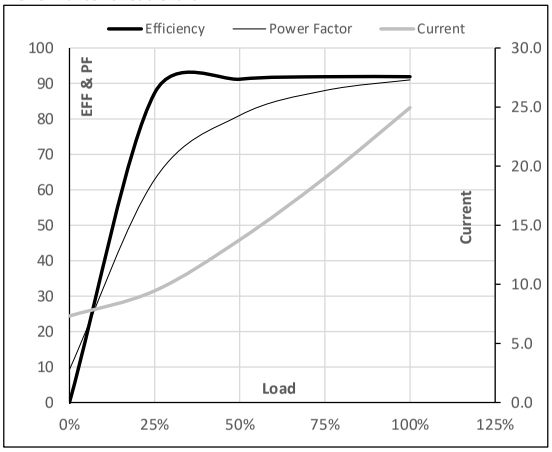


**Motor Speed Torque Data**

| Load Point | | LR | P-Up | BD | Rated | NL |
|---|---|---|---|---|---|---|
| Speed | r/min | 0 | 600 | 2637 | 2950 | 3000 |
| Current | A | 187.2 | 168.4 | 111.0 | 25.0 | 7.3 |
| Torque | pu | 2.3 | 1.9 | 3.4 | 1 | 0 |

**Starting Characteristics Chart**

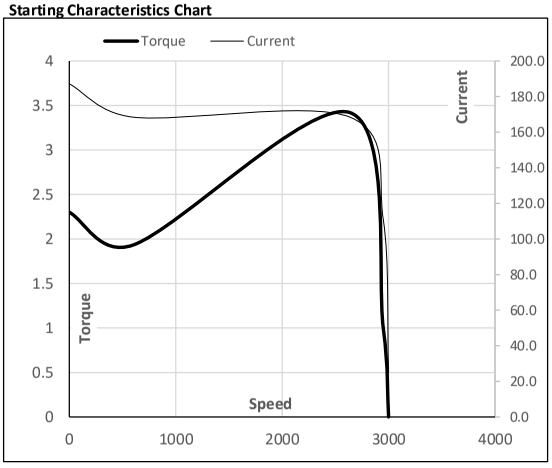


**NOTE** Refer data sheet for applicable standard and tolerances on performance parameters

Issued By
Issued Date

REGAL

Uncontrolled Copy

marathon® Motors

TerraMAX®

**Model No.** TCA0151A3131GACD01

| Enclosure | U (V) | Δ / Y Conn | f [Hz] | P [kW] | P [hp] | I [A] | n [rpm] | T [kgm] | T [Nm] | IE Class | Amb [°C] | Duty | Elevation [m] | Inertia [kg-m$^2$] | Weight [kg] |
|---|---|---|---|---|---|---|---|---|---|---|---|---|---|---|---|
| TEFC | 415 | Δ | 50 | 15 | 20 | 25.0 | 2950 | 4.92 | 48.28 | IE3 | 50 | S1 | 1000 | 0.0796 | 159 |

**Motor Speed Torque Data**

| Load | | FL | $I_1$ | $I_2$ | $I_3$ | $I_4$ | $I_5$ | LR |
|---|---|---|---|---|---|---|---|---|
| TWT Hot | s | 10000 | 26 | 18 | 15 | 10 | 8 | 7 |
| TWT Cold | s | 10000 | 80 | 38 | 35 | 30 | 20 | 15 |
| Current | pu | 1 | 2 | 3 | 4 | 5 | 5.5 | 7.5 |

**Thermal Characteristics Chart**

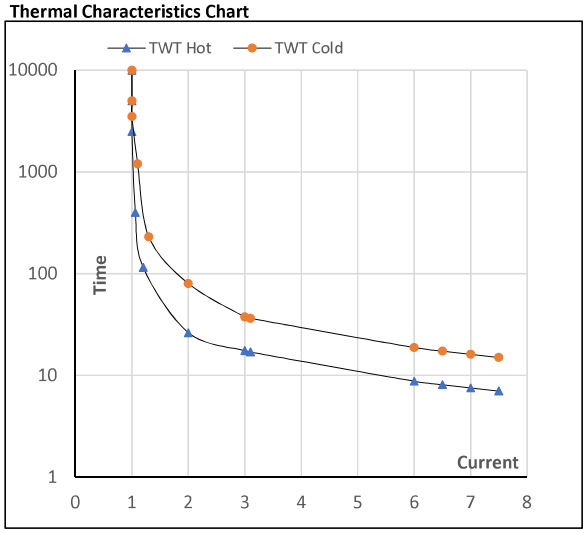


**NOTE** Refer data sheet for applicable standard and tolerances on performance parameters

Issued By
Issued Date

REGAL