PRODUCT INFORMATION PACKET

Model No: SCA7P53A3121GAAD01
Catalog No: SCA7P53A3121GAAD01
7.5kW, General Purpose Low Voltage IEC Motor, 3 phase, 6 Pole, 415V, B5, 50Hz, 87.2%, 160M Frame, TEFC
Cast Iron IE2 Efficiency Motors

Regal and Marathon are trademarks of Regal Beloit Corporation or one of its affiliated companies.
©2020 Regal Beloit Corporation, All Rights Reserved. MC017097E

Nameplate Specifications

Output HP	**10 Hp**	Output KW	**7.5 kW**
Frequency	**50 Hz**	Voltage	**415 V**
Current	**16.8 A**	Speed	**975 rpm**
Service Factor	**1**	Phase	**3**
Efficiency	**87.2 %**	Power Factor	**0.71**
Duty	**S1**	Insulation Class	**F**
Frame	**160M**	Enclosure	**Totally Enclosed Fan Cooled**
Ambient Temperature	**50 °C**	Drive End Bearing Size	**6309**
Opp Drive End Bearing Size	**6209**	UL	**No**
CSA	**No**	CE	**Yes**
IP Code	**55**		

Technical Specifications

Electrical Type	**Squirrel Cage**	Starting Method	**Direct On Line**
Poles	**6**	Rotation	**Bi-Directional**
Mounting	**B5**	Motor Orientation	**Horizontal**
Drive End Bearing	**2z-C3**	Opp Drive End Bearing	**2z-C3**
Frame Material	**Cast Iron**	Shaft Type	**Keyed**
Overall Length	**622 mm**	Frame Length	**254 mm**
Shaft Diameter	**42 mm**	Shaft Extension	**110 mm**
Assembly/Box Mounting	**TOP**		
Connection Drawing	**8442000085**	Outline Drawing	**0216000931**

This is an uncontrolled document once printed or downloaded and is subject to change without notice. Date Created:16/01/2020

Uncontrolled Copy

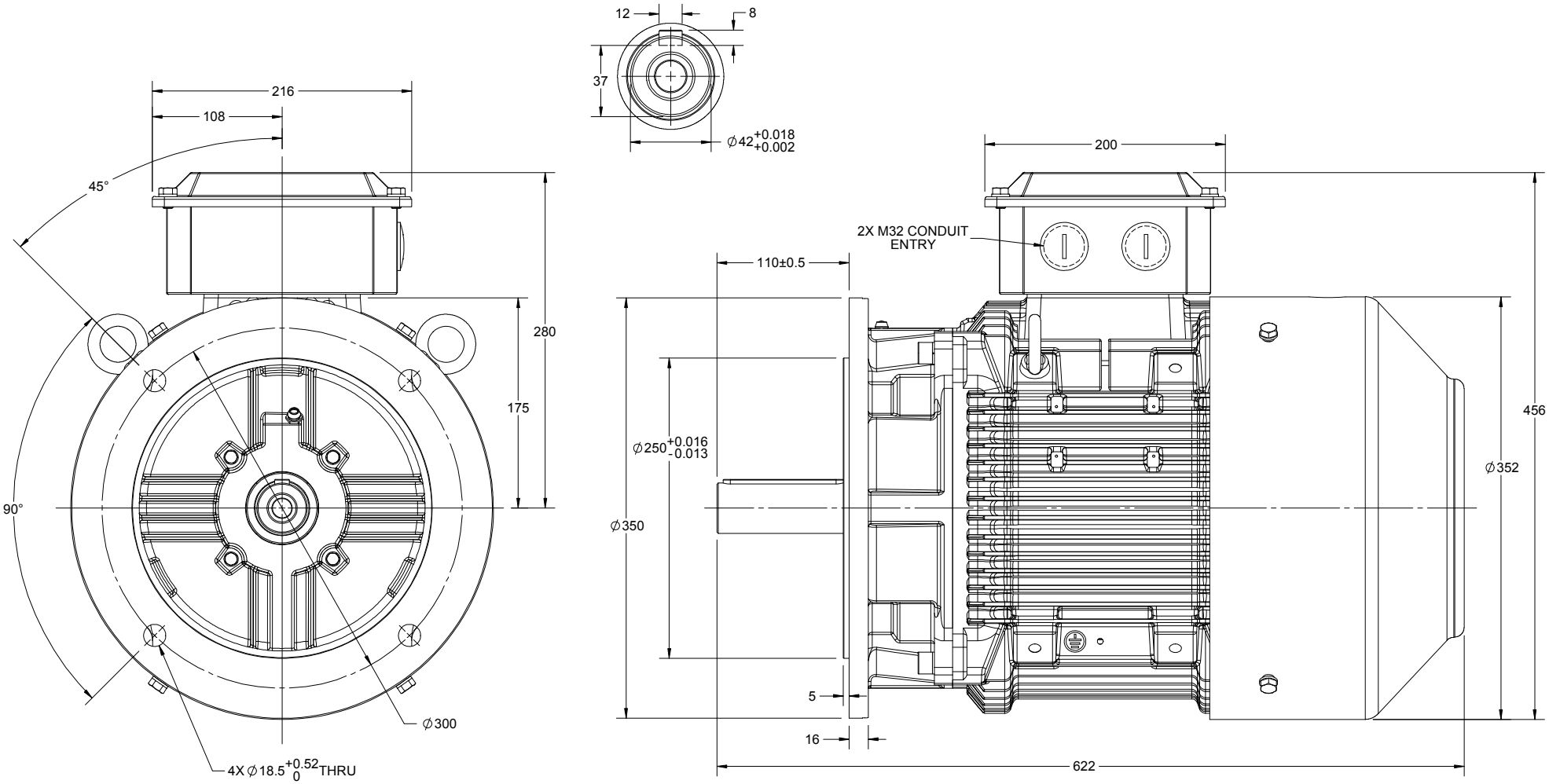

DRAWING REVISION	REVISION BY	DATE
B	LK	26/06/2019
ECO: ECO-0169536	APPROVED BY: SR	DATE: 26/06/2019

ECO DESCRIPTION: MODEL UPDATED AS PER NEW 3D STRUCTURE

COPYRIGHT REGAL BELOIT AMERICA, INC. ALL RIGHTS RESERVED.
PROPRIETARY AND CONFIDENTIAL INFORMATION - THIS DOCUMENT IS THE PROPERTY OF REGAL BELOIT AMERICA, INC. ("OWNER") AND CONTAINS OWNER'S PROPRIETARY INFORMATION. ANY PERSON, CORPORATION OR OTHER FIRM RECEIVING IT IS DEEMED, BY RECEIVING IT, TO AGREE THAT IT, AND/OR ANY PART OF IT, SHALL NOT BE DISCLOSED TO ANY PERSON, CORPORATION OR OTHER ENTITY, DUPLICATED, AND/OR USED, EXCEPT AS EXPRESSLY APPROVED IN WRITING IN ADVANCE BY OWNER. THIS DOCUMENT SHALL BE RETURNED TO OWNER UPON REQUEST. IT MAY BE SUBJECT TO CERTAIN RESTRICTIONS UNDER APPLICABLE EXPORT CONTROL LAWS AND REGULATIONS.

DRAWN BY	PRIYA
DATE	03/04/2018
APPROVED BY	JAY
DATE	03/04/2018
REFERENCE	
THIRD ANGLE PROJECTION	

marathon™ Motors

DESCRIPTION: OUTLINE
160M FR B5-MTG MOTOR TYPE:SCA

MATERIAL | PROCESS/FINISH

SIZE: B | DRAWING NUMBER: 0216000931 | SHEET: 1 OF 1

COPYRIGHT REGAL BELOIT AMERICA, INC. ALL RIGHTS RESERVED.
PROPRIETARY AND CONFIDENTIAL INFORMATION - THIS DOCUMENT IS THE PROPERTY OF REGAL BELOIT AMERICA, INC. ("OWNER") AND CONTAINS OWNER'S PROPRIETARY INFORMATION. ANY PERSON, CORPORATION OR OTHER FIRM RECEIVING IT IS DEEMED, BY RECEIVING IT, TO AGREE THAT IT, AND/OR ANY PART OF IT, SHALL NOT BE DISCLOSED TO ANY PERSON, CORPORATION OR OTHER ENTITY, DUPLICATED, AND/OR USED, EXCEPT AS EXPRESSLY APPROVED IN WRITING IN ADVANCE BY OWNER. THIS DOCUMENT SHALL BE RETURNED TO OWNER UPON REQUEST. IT MAY BE SUBJECT TO CERTAIN RESTRICTIONS UNDER APPLICABLE EXPORT CONTROL LAWS AND REGULATIONS.
Uncontrolled Copy

DRAWING REVISION	REVISION BY	DATE
A	SN	13/01/2017
ECO	APPROVED BY	DATE
ECO-0116390	SBD	13/01/2017

ECO DESCRIPTION: NEW DRAWING RELEASE

GEOMENTRIC TOLERANCE		
LINEAR DIM	>0~6	±0.1
	>6~30	±0.2
	>30~120	±0.3

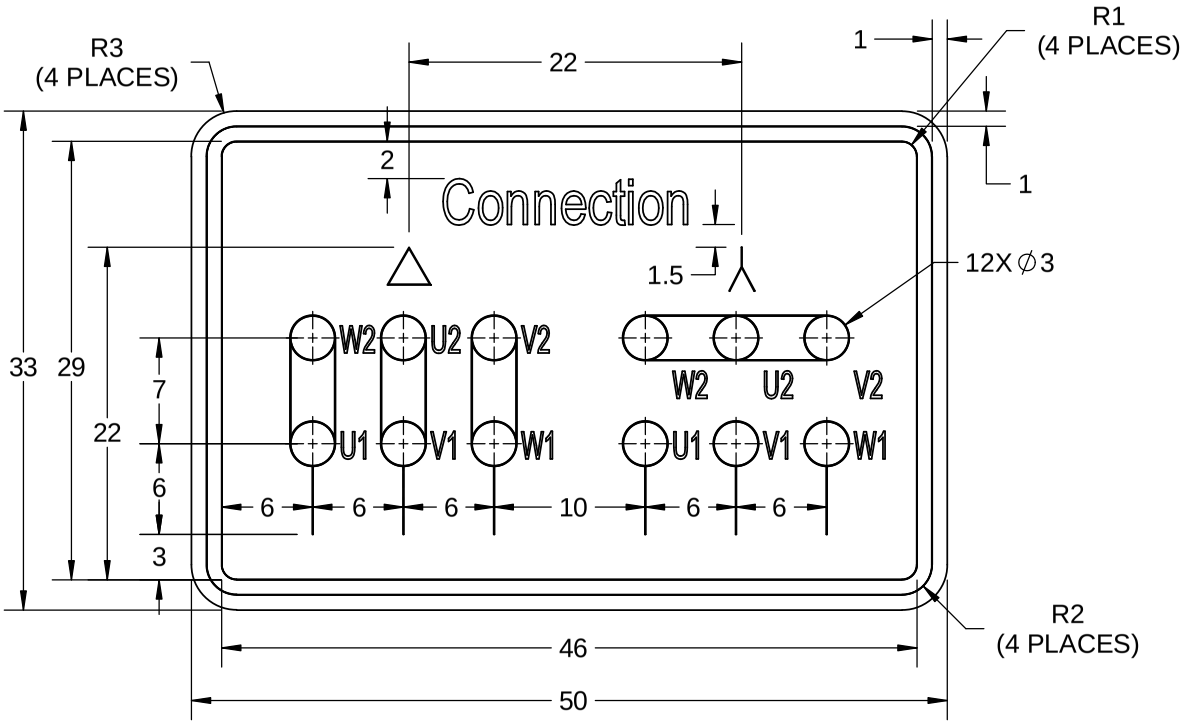

NOTES:

1. PRESSURE-SENSITIVE ADHESIVE COATED PAPER ON THE BACK OF SELF-ADHESIVE.
2. AT THE END OF YELLOW, WORDS, SYMBOLS, LETTERS ARE BLACK, BORDER IS BLACK.
3. THE TOLERANCE OF THE LINEAR SIZE OF THE TOLERANCE WITHOUT THE TOLERANCE BY THE TABLE.

8WD.442.2017

DRAWN BY: SN	REGAL™ Regal Beloit America, Inc.	
DATE: 16/12/2016		
APPROVED BY: SBD	DESCRIPTION: CONN DIAGRAM-NAMEPLATE	
DATE: 16/12/2016		
REFERENCE	MATERIAL	PROCESS/FINISH
THIRD ANGLE PROJECTION	SIZE: A / DRAWING NUMBER: 8442000085	SHEET: 1 OF 1

Uncontrolled Copy

marathon® Motors

TerraMAX®

Model No. SCA7P53A3121GAAD01

U (V)	Δ / Y Conn	f [Hz]	P [kW]	P [hp]	I [A]	n [RPM]	T [Nm]	IE Class	% EFF at __ load 5/4FL	FL	3/4FL	1/2FL	PF at __ load FL	3/4FL	1/2FL	I_A/I_N [pu]	T_A/T_N [pu]	T_K/T_N [pu]
415	Δ	50	7.5	10	16.8	975	74.18	IE2	-	87.2	87.2	85.9	0.71	0.63	0.48	5.4	1.6	2.4

Motor type	SCA	
Enclosure	TEFC	
Frame Material	Cast Iron	
Frame size	160M	
Duty	S1	
Voltage variation *	± 10%	
Frequency variation *	± 5%	
Combined variation *	10%	
Design	N	
Service factor	1.0	
Insulation class	F	
Ambient temperature	-20 to +50	°C
Temperature rise (by resistance)	70 [Class B]	K
Altitude above sea level	1000	meter
Hazardous area classification	NA	
Zone classification	NA	
Gas group	NA	
Temperature class	NA	
Rotor type	Aluminum Die cast	
Bearing type	Anti-friction ball	
DE / NDE bearing	6309-2Z / 6209-2Z	
Lubrication method	Greased for life	
Type of grease	NA	

Degree of protection	IP 55	
Mounting type	IM B5	
Cooling method	IC 411	
Motor weight - approx.	140	kg
Gross weight - approx.	160	kg
Motor inertia	0.0750	kgm^2
Load inertia	Customer to Provide	
Vibration level	2.2	mm/s
Noise level (1meter distance from motor)	65	dB(A)
No. of starts hot/cold/Equally spread	2/3/4	
Starting method	DOL	
Type of coupling	Direct	
LR withstand time (hot/cold)	12/25	s
Direction of rotation	Bi-directional	
Standard rotation	Clockwise form DE	
Paint shade	RAL 5014	
Accessories		
Accessory - 1	-	
Accessory - 2	-	
Accessory - 3	-	
Terminal box position	TOP	
Maximum cable size/conduit size	1R x 3C x 35mm²/2 X M32 x 1.5	
Auxiliary terminal box	NA	

I_A/I_N - Locked Rotor Current / Rated Current

T_A/T_N - Locked Rotor Torque / Rated Torque

T_K/T_N - Breakdown Torque / Rated Torque

NOTE

All performance values at rated voltage and frequency.

All performance parameters are subjected to standard tolerance as per IEC 60034-1

* Voltage, Frequency and combine variation are as per IEC60034-1

Technical data are subject to change. There may be discrepancies between calculated and name plate values.

Efficiency	Europe	China	India	Aus/Nz	Brazil	Global IEC
Standards	-	-	IS 12615 : 2018	-	-	-

REGAL

Uncontrolled Copy

marathon® Motors

TerraMAX®

Model No. SCA7P53A3121GAAD01

Enclosure	U (V)	Δ / Y Conn	f [Hz]	P [kW]	P [hp]	I [A]	n [RPM]	T [kgm]	T [Nm]	IE Class	Amb [°C]	Duty	Elevation [m]	Inertia [kg-m^2]	Weight [kg]
TEFC	415	Δ	50	7.5	10	16.8	975	7.56	74.18	IE2	50	S1	1000	0.0750	140

Motor Load Data

Load Point		NL	1/4FL	1/2FL	3/4FL	FL	5/4FL
Current	A	9.9	10.2	13.0	14.7	16.8	
Torque	Nm	0.0	18.0	36.1	54.5	74.2	
Speed	r/min	1000	994	988	982	975	
Efficiency	%	0.0	78.7	85.9	87.2	87.2	
Power Factor	%	6.8	32.4	48.3	62.9	71.2	

Performance vs Load Chart

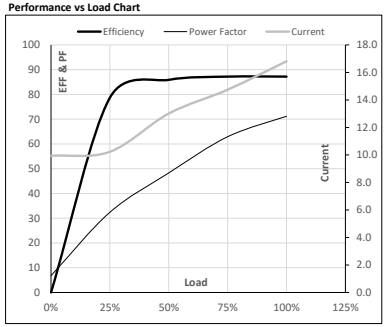

Motor Speed Torque Data

Load Point		LR	P-Up	BD	Rated	NL
Speed	r/min	0	91	846	975	1000
Current	A	90.9	81.8	52.6	16.8	9.9
Torque	pu	1.6	1.3	2.4	1	0

Starting Characteristics Chart

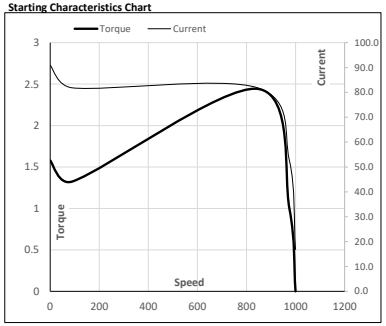

NOTE Refer data sheet for applicable standard and tolerances on performance parameters

Issued By
Issued Date

REGAL

Uncontrolled Copy

marathon® Motors

TerraMAX®

Model No. SCA7P53A3121GAAD01

Enclosure	U (V)	Δ / Y Conn	f [Hz]	P [kW]	P [hp]	I [A]	n [rpm]	T [kgm]	T [Nm]	IE Class	Amb [°C]	Duty	Elevation [m]	Inertia [kg-m^2]	Weight [kg]
TEFC	415	Δ	50	7.5	10	16.8	975	7.56	74.18	IE2	50	S1	1000	0.0750	140

Motor Speed Torque Data

Load		FL	I_1	I_2	I_3	I_4	I_5	LR
TWT Hot	s	10000	35	22	16	14	13	12
TWT Cold	s	10000	80	45	34	30	26	25
Current	pu	1	2	3	4	4.5	5	5.4

Thermal Characteristics Chart

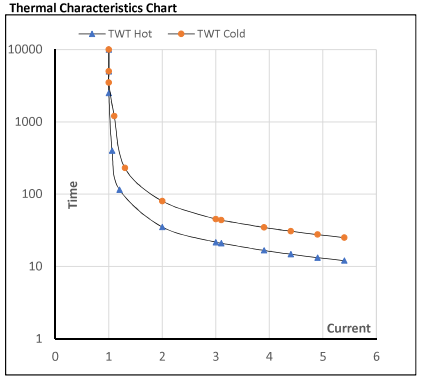

NOTE Refer data sheet for applicable standard and tolerances on performance parameters

Issued By
Issued Date

REGAL