PRODUCT INFORMATION PACKET

Model No: SCA3552A3113GAAD01
Catalog No: SCA3552A3113GAAD01
355kW, General Purpose Low Voltage IEC Motor, 3 phase, 4 Pole, 415V, B3, 50Hz, 95.1%, 355L Frame, TEFC
Cast Iron IE2 Efficiency Motors

Regal and Marathon are trademarks of Regal Beloit Corporation or one of its affiliated companies.
©2020 Regal Beloit Corporation, All Rights Reserved. MC017097E

Nameplate Specifications

Output HP	475 Hp	Output KW	355.0 kW
Frequency	50 Hz	Voltage	415 V
Current	583.5 A	Speed	1490 rpm
Service Factor	1	Phase	3
Efficiency	95.1 %	Power Factor	0.89
Duty	S1	Insulation Class	F
Frame	355L	Enclosure	Totally Enclosed Fan Cooled
Ambient Temperature	50 °C	Drive End Bearing Size	6322
Opp Drive End Bearing Size	6322	UL	No
CSA	No	CE	Yes
IP Code	55		

Technical Specifications

Electrical Type	Squirrel Cage	Starting Method	Direct On Line
Poles	4	Rotation	Bi-Directional
Mounting	B3	Motor Orientation	Horizontal
Drive End Bearing	C3	Opp Drive End Bearing	C3
Frame Material	Cast Iron	Shaft Type	Keyed
Overall Length	1542 mm	Frame Length	1010 mm
Shaft Diameter	95 mm	Shaft Extension	170 mm
Assembly/Box Mounting	SIDE		
Outline Drawing	0235502296	Connection Drawing	8442000085

This is an uncontrolled document once printed or downloaded and is subject to change without notice. Date Created:16/01/2020

Uncontrolled Copy

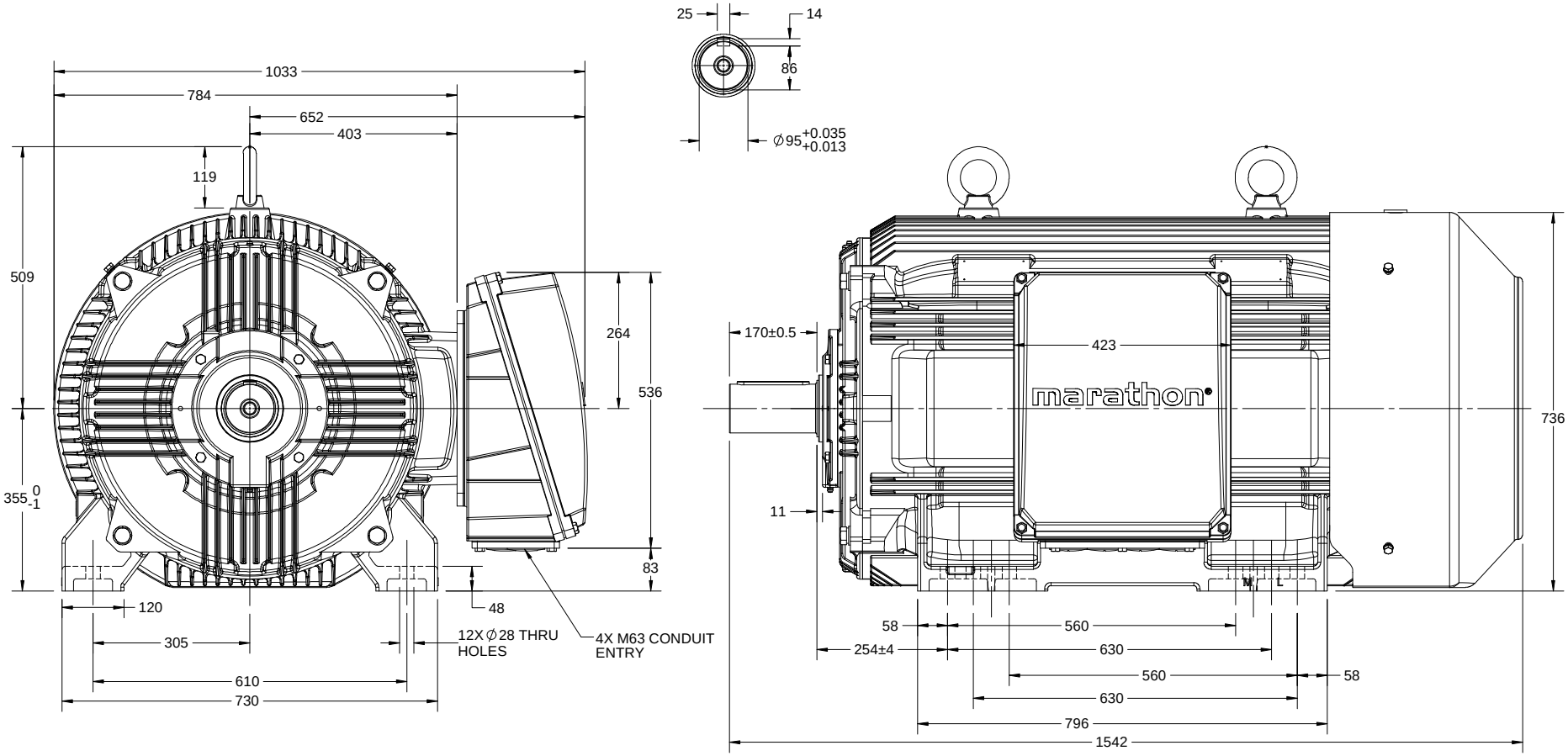

DRAWING REVISION B	REVISION BY VS	DATE 09/07/2018	DRAWN BY SKM	marathon Motors
ECO ECO-0148344	APPROVED BY SBD	DATE 09/07/2018	DATE 11/08/2017	
ECO DESCRIPTION MODEL UPDATED			APPROVED BY JAY	DESCRIPTION OUTLINE 355L FR-4~8P-B3 MTG. TCA/QCA-RHS TB
			DATE 11/08/2017	
			REFERENCE	MATERIAL / PROCESS/FINISH
			THIRD ANGLE PROJECTION	SIZE B / DRAWING NUMBER 0235502296 / SHEET 1 OF 1

COPYRIGHT REGAL BELOIT AMERICA, INC. ALL RIGHTS RESERVED.
PROPRIETARY AND CONFIDENTIAL INFORMATION - THIS DOCUMENT IS THE PROPERTY OF REGAL BELOIT AMERICA, INC. ("OWNER") AND CONTAINS OWNER'S PROPRIETARY INFORMATION. ANY PERSON, CORPORATION OR OTHER FIRM RECEIVING IT IS DEEMED, BY RECEIVING IT, TO AGREE THAT IT, AND/OR ANY PART OF IT, SHALL NOT BE DISCLOSED TO ANY PERSON, CORPORATION OR OTHER ENTITY, DUPLICATED, AND/OR USED, EXCEPT AS EXPRESSLY APPROVED IN WRITING IN ADVANCE BY OWNER. THIS DOCUMENT SHALL BE RETURNED TO OWNER UPON REQUEST. IT MAY BE SUBJECT TO CERTAIN RESTRICTIONS UNDER APPLICABLE EXPORT CONTROL LAWS AND REGULATIONS.

COPYRIGHT REGAL BELOIT AMERICA, INC. ALL RIGHTS RESERVED.
PROPRIETARY AND CONFIDENTIAL INFORMATION - THIS DOCUMENT IS THE PROPERTY OF REGAL BELOIT AMERICA, INC. ("OWNER") AND CONTAINS OWNER'S PROPRIETARY INFORMATION. ANY PERSON, CORPORATION OR OTHER FIRM RECEIVING IT IS DEEMED, BY RECEIVING IT, TO AGREE THAT IT, AND/OR ANY PART OF IT, SHALL NOT BE DISCLOSED TO ANY PERSON, CORPORATION OR OTHER ENTITY, DUPLICATED, AND/OR USED, EXCEPT AS EXPRESSLY APPROVED IN WRITING IN ADVANCE BY OWNER. THIS DOCUMENT SHALL BE RETURNED TO OWNER UPON REQUEST. IT MAY BE SUBJECT TO CERTAIN RESTRICTIONS UNDER APPLICABLE EXPORT CONTROL LAWS AND REGULATIONS.
Uncontrolled Copy

DRAWING REVISION	REVISION BY	DATE
A	SN	13/01/2017
ECO	APPROVED BY	DATE
ECO-0116390	SBD	13/01/2017

ECO DESCRIPTION: NEW DRAWING RELEASE

GEOMENTRIC TOLERANCE		
LINEAR DIM	>0~6	±0.1
	>6~30	±0.2
	>30~120	±0.3

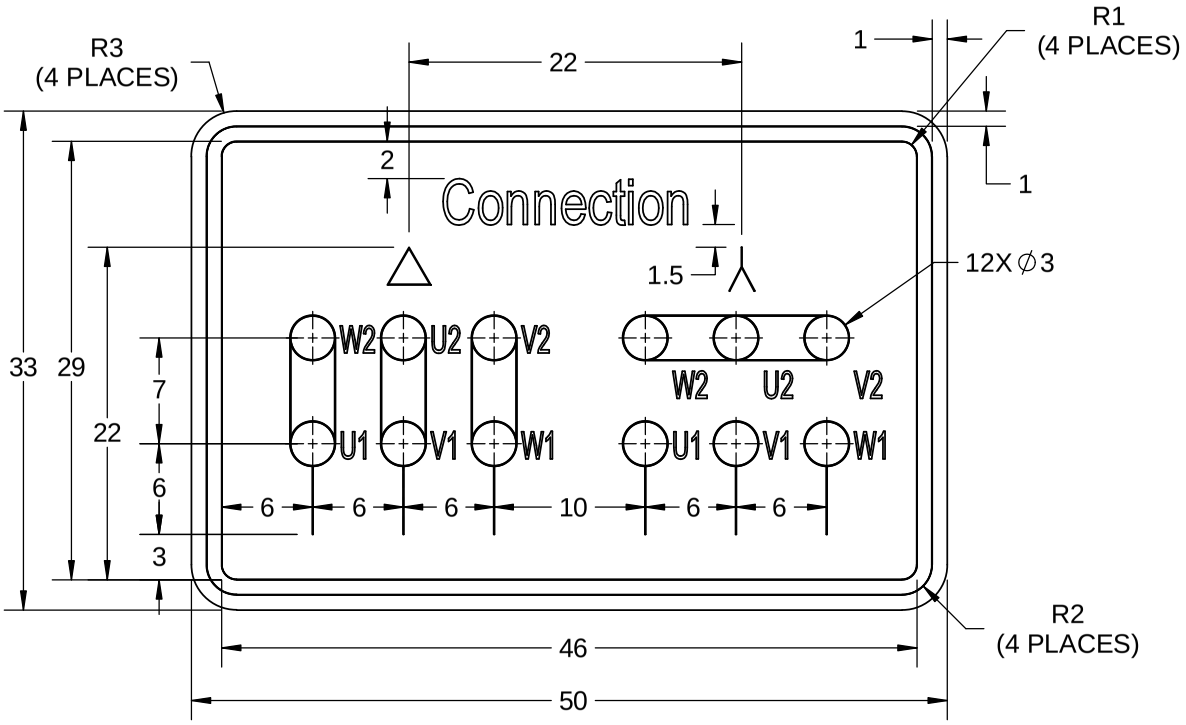

NOTES:

1. PRESSURE-SENSITIVE ADHESIVE COATED PAPER ON THE BACK OF SELF-ADHESIVE.
2. AT THE END OF YELLOW, WORDS, SYMBOLS, LETTERS ARE BLACK, BORDER IS BLACK.
3. THE TOLERANCE OF THE LINEAR SIZE OF THE TOLERANCE WITHOUT THE TOLERANCE BY THE TABLE.

8WD.442.2017

DRAWN BY: SN	REGAL™ Regal Beloit America, Inc.	
DATE: 16/12/2016		
APPROVED BY: SBD	DESCRIPTION: CONN DIAGRAM-NAMEPLATE	
DATE: 16/12/2016		
REFERENCE	MATERIAL	PROCESS/FINISH
THIRD ANGLE PROJECTION	SIZE: A / DRAWING NUMBER: 8442000085	SHEET: 1 OF 1

Uncontrolled Copy

marathon® Motors

TerraMAX®

Model No. SCA3552A3113GAAD01

U	Δ / Y	f	P	P	I	n	T	IE	% EFF at __ load				PF at __ load			I_A/I_N	T_A/T_N	T_K/T_N
(V)	Conn	[Hz]	[kW]	[hp]	[A]	[RPM]	[Nm]	Class	5/4FL	FL	3/4FL	1/2FL	FL	3/4FL	1/2FL	[pu]	[pu]	[pu]
415	Δ	50	355	475	583.5	1490	2271.1	IE2	-	95.1	95.1	96.2	0.89	0.88	0.83	5.8	2.0	2.4

Motor type	SCA	
Enclosure	TEFC	
Frame Material	Cast Iron	
Frame size	355L	
Duty	S1	
Voltage variation *	± 10%	
Frequency variation *	± 5%	
Combined variation *	10%	
Design	N	
Service factor	1.0	
Insulation class	F	
Ambient temperature	-20 to +50	°C
Temperature rise (by resistance)	70 [Class B]	K
Altitude above sea level	1000	meter
Hazardous area classification	NA	
Zone classification	NA	
Gas group	NA	
Temperature class	NA	
Rotor type	Aluminum Die cast	
Bearing type	Anti-friction ball	
DE / NDE bearing	6322 C3 / 6322 C3	
Lubrication method	Regreasable	
Type of grease	Shell Gadus S5 V100 or Equivalent	

Degree of protection	IP 55	
Mounting type	IM B3	
Cooling method	IC 411	
Motor weight - approx.	1933	kg
Gross weight - approx.	1978	kg
Motor inertia	10.3679	kgm^2
Load inertia	Customer to Provide	
Vibration level	2.8	mm/s
Noise level (1meter distance from motor)	82	dB(A)
No. of starts hot/cold/Equally spread	2/3/4	
Starting method	DOL	
Type of coupling	Direct	
LR withstand time (hot/cold)	15/30	s
Direction of rotation	Bi-directional	
Standard rotation	Clockwise form DE	
Paint shade	RAL 5014	
Accessories		
Accessory - 1	-	
Accessory - 2	-	
Accessory - 3	-	
Terminal box position	RHS	
Maximum cable size/conduit size	1R x 3C x 300mm²/4 x M63 x 1.5	
Auxiliary terminal box	Available on Request	

I_A/I_N - Locked Rotor Current / Rated Current

T_A/T_N - Locked Rotor Torque / Rated Torque

T_K/T_N - Breakdown Torque / Rated Torque

NOTE

All performance values at rated voltage and frequency.

All performance parameters are subjected to standard tolerance as per IEC 60034-1

* Voltage, Frequency and combine variation are as per IEC60034-1

Technical data are subject to change. There may be discrepancies between calculated and name plate values.

Efficiency	Europe	China	India	Aus/Nz	Brazil	Global IEC
Standards	-	-	IS 12615 : 2018	-	-	-

REGAL

Uncontrolled Copy

marathon® Motors

TerraMAX®

Model No. SCA3552A3113GAAD01

Enclosure	U (V)	Δ / Y Conn	f [Hz]	P [kW]	P [hp]	I [A]	n [RPM]	T [kgm]	T [Nm]	IE Class	Amb [°C]	Duty	Elevation [m]	Inertia [kg-m^2]	Weight [kg]
TEFC	415	Δ	50	355	475	583.5	1490	231.59	2271.13	IE2	50	S1	1000	10.3679	1933

Motor Load Data

Load Point		NL	1/4FL	1/2FL	3/4FL	FL	5/4FL
Current	A	138.6	194.3	320.8	452.1	583.5	
Torque	Nm	0.0	564.7	1131.2	1699.6	2271.1	
Speed	r/min	1500	1498	1495	1493	1490	
Efficiency	%	0.0	94.4	96.2	95.1	95.1	
Power Factor	%	4.7	67.2	83.0	88.0	89.0	

Performance vs Load Chart

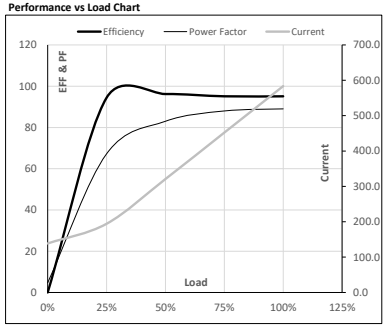

Motor Speed Torque Data

Load Point		LR	P-Up	BD	Rated	NL
Speed	r/min	0	300	1371	1490	1500
Current	A	3395.1	3055.6	1905.5	583.5	138.6
Torque	pu	2.0	1.7	2.4	1	0

Starting Characteristics Chart

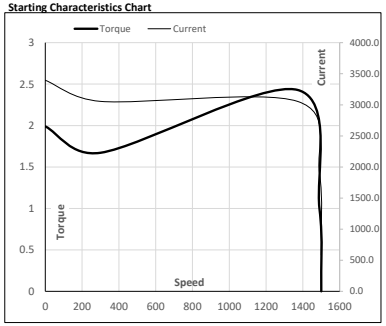

NOTE Refer data sheet for applicable standard and tolerances on performance parameters

Issued By
Issued Date

REGAL

Uncontrolled Copy

marathon® Motors

TerraMAX®

Model No. SCA3552A3113GAAD01

Enclosure	U (V)	Δ / Y Conn	f [Hz]	P [kW]	P [hp]	I [A]	n [rpm]	T [kgm]	T [Nm]	IE Class	Amb [°C]	Duty	Elevation [m]	Inertia [kg-m^2]	Weight [kg]
TEFC	415	Δ	50	355	475	583.5	1490	231.59	2271.13	IE2	50	S1	1000	10.3679	1933

Motor Speed Torque Data

Load		FL	I_1	I_2	I_3	I_4	I_5	LR
TWT Hot	s	10000	44	29	25	17	16	15
TWT Cold	s	10000	87	58	45	35	31	30
Current	pu	1	2	3	4	5	5.5	5.8

Thermal Characteristics Chart

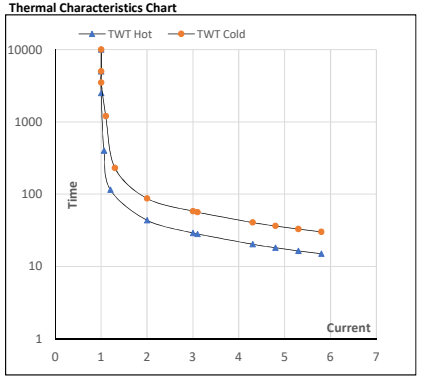

NOTE Refer data sheet for applicable standard and tolerances on performance parameters

Issued By
Issued Date

REGAL